SPS-0411 REV B

AUSTIN TRIPLE STRAIGHT ARM VANITY LIGHT

JOB NAME: _____ FIXTURE TYPE: _____

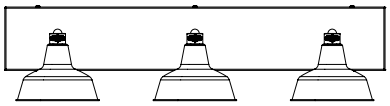

BLE - WVS3 - WHA8 - _____ - _____ - _____

A B C

Order Example: BLE - WVS3 - WHA8 - 420 - WC - 100

A - FINISHES

POWDER COAT FINISHES[1]:

100	Black
105	Textured Black
106	Matte Black
200	White
206	Matte White
300	Dark Green
307	Emerald Green
311	Jadite
370	Mint
380	Chartreuse
390	Teal

A - FINISHES (CONTINUED)

POWDER COAT FINISHES[1]:

400	Barn Red
420	Orange
470	Watermelon
480	Blush Pink
490	Magenta
495	Sherbet Orange
500	Buttery Yellow
570	Sunflower
600	Bronze
601	Chocolate
605	Rust

A - FINISHES (CONTINUED)

POWDER COAT FINISHES[1]:

615	Oil-Rubbed Bronze
700	Royal Blue
705	Navy
710	Cobalt Blue
715	Delphite Blue
790	Lavender
800	Industrial Grey
805	Charcoal Granite
810	Graphite
975	Galvanized

B - WIRE CAGE

NA	None
WC	(2) Wire Cages

C - CAGE FINISH

*Please Note: See **Section A** for all applicable wire cage finish options.*
(1) If no wire cage selected in Section C, please select NA.

NA	Not Applicable

IMPORTANT: *(1) All Powder Coat finished shades, with the exception of 975-Galvanized, feature a white interior*

DIMENSIONAL DRAWING

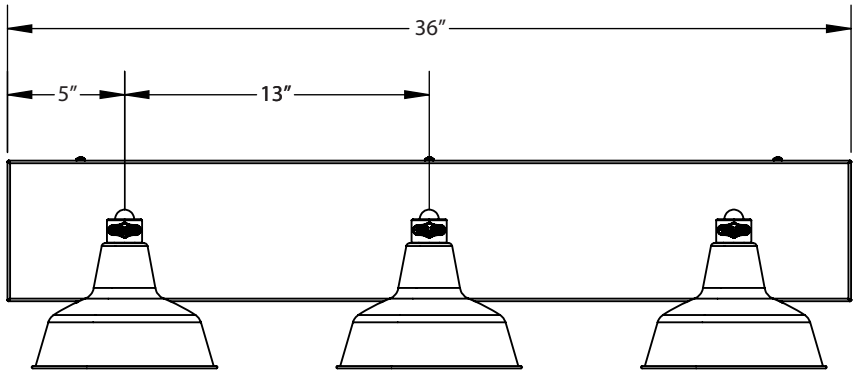

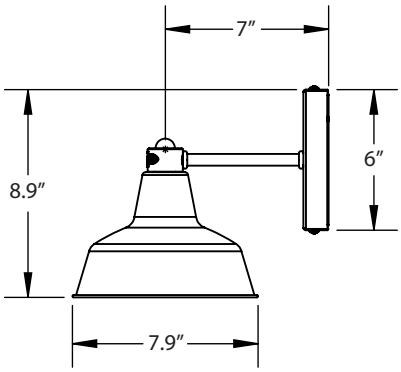

SIDE VIEW

SPECIFICATIONS

CERTIFICATIONS, LISTINGS & WARRANTY

MADE IN THE USA
Manufactured and Hand-Crafted in Our 60,000 Square Foot Facility Located in Titusville, FL

CSA LISTED FOR DAMP LOCATIONS

LIMITED WARRANTY
For Additional Information on Our Limited Warranty, Please See Our Terms & Conditions

CONSTRUCTION & FINISH

BACKING PLATE
Constructed from 19 Gauge Galvanized Steel

POWDER COAT SHADES
Hand -Spun from High Purity 3003-O Temper Aluminum

POWDER COAT FINISHES
Polyester Powder Coat Finishes Are Electro-Statically Applied and Thermocured on the Shade, Mounting Arms and Backing Plate

CONSTRUCTION & FINISH (CONTINUED)

MOUNTING ARMS
Brass Electroplated Steel Tube or Approved Alternative

LIGHT SOURCE

INCANDESCENT
Medium Base E26 Socket, 120 VAC, 100W Max