SPS-0417 REV B

CANAL STREET SOHO SCONCE

JOB NAME: _____ FIXTURE TYPE: _____

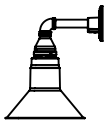

BLE - W - SOH - CAN - _____ - _____

A B

Order Example: BLE - W - SOH - CAN - 570 - 570

A - SHADE FINISH

POWDER COAT FINISHES[1]:

100	Black
105	Textured Black
106	Matte Black
200	White
206	Matte White
300	Dark Green
307	Emerald Green
311	Jadite
370	Mint
380	Chartreuse
390	Teal
400	Barn Red
420	Orange
470	Watermelon
480	Blush Pink
490	Magenta
495	Sherbet Orange
500	Buttery Yellow
570	Sunflower
600	Bronze
601	Chocolate
605	Rust
615	Oil-Rubbed Bronze
700	Royal Blue
705	Navy
710	Cobalt Blue
715	Delphite Blue
790	Lavender
800	Industrial Grey
805	Charcoal Granite
810	Graphite
975	Galvanized

B - MOUNTING FINISH

*Please Note: See **Section A** for Finish Options. Mounting finish includes shade top, mounting arm and backing plate.*

MOUNTING DIMENSIONS

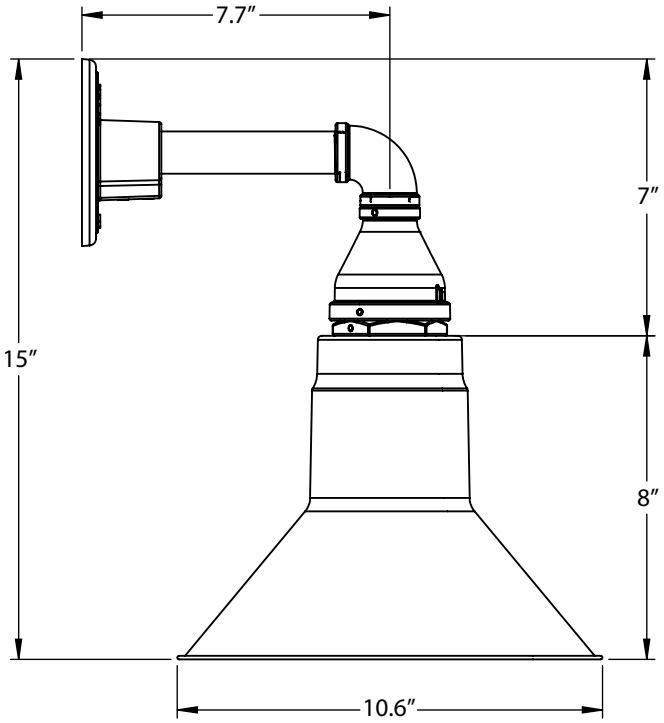

IMPORTANT: *(1) All Powder Coat finished shades, 975-Galvanized excluded, feature a white interior*

SPECIFICATIONS

CERTIFICATIONS, LISTINGS & WARRANTY

MADE IN THE USA
Manufactured and Hand-Crafted in Our 60,000 Square Foot Facility Located in Titusville, FL

CSA LISTED FOR WET LOCATIONS

LIMITED WARRANTY
For Additional Information on Our Limited Warranty, Please See Our Terms & Conditions

UL CERTIFICATION
UL Listed Fixtures Available upon Request. Please Consult Factory for Additonal Information.

CONSTRUCTION & FINISH

POWDER COAT SHADE
Hand-Spun from High Purity 3003-O Temper Aluminum

POWDER COAT FINISHES
Polyester Powder Coat Finishes Are Electro-Statically Applied and Thermocured on the Shade

GALVANIZE SHADE
Hand Spun from High Quality Galvanized Steel

GOOSENECK
3/4″ Nominal (1.05″ Actual) Sch 40, 6063 Aluminum Gooseneck

LIGHT SOURCE

INCANDESCENT
Medium Base E26 Socket, 120 VAC, 200 Watt Max