SPS-0327 REV B

AUSTIN QUICK SHIP WALL SCONCE

JOB NAME: _____ FIXTURE TYPE: _____

BLE - W - QS - WHA10 - _____ - _____

A B

Order Example: BLE - W - QS - WHA10 - 200 - WC

A - FINISHES

POWDER COAT FINISHES[1]:

100	Black
200	White
600	Bronze
975	Galvanized

B - SHADE ACCESSORY

NA	None/No Wire Cage
WC	Wire Cage[2]

IMPORTANT: *(1) All Powder Coat finished shades, Galvanized excluded, feature a white interior (2) If selected, shade accessory finish will match selection in Section A*

MOUNTING DIMENSIONS

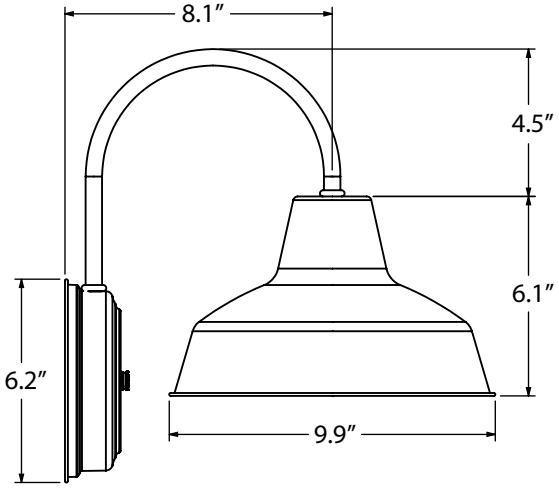

SPECIFICATIONS

CERTIFICATIONS, LISTINGS & WARRANTY

MADE IN THE USA
Manufactured and Hand-Crafted in Our 60,000 Square Foot Facility Located in Titusville, FL

CSA LISTED FOR WET LOCATIONS

LIMITED WARRANTY
For Additional Information on Our Limited Warranty, Please See Our Terms & Conditions

CONSTRUCTION & FINISHES

BACKING PLATE & SHADE
Hand-Spun from High Purity 3003-O Temper Aluminum

GALVANIZED SHADE
Hand Spun from High Quality Galvanized Steel

WALL SCONCE ARM
1/4″ Nominal (0.50″ Actual) Steel/Aluminum Mounting Arm

POWDER COAT FINISHES
Polyester Powder Coat Finishes Are Electro-Statically Applied and Thermocured

LIGHT SOURCE

INCANDESCENT
Medium Base E26 Socket, 120 VAC, 200 Watt Max