REV 10.24.18

MINIMALIST POLISHED BRASS CAGE PENDANT

BARN LIGHT CORD PENDANT COLLECTION

Max Weight: 10.0 lbs

PROJECT NAME _____

PROJECT TYPE _____

SPS-0320

BLE - 502 - TW - _____ - _____

A B

Order Example: BLE - 502 - TW - TBK - WC

A - COTTON TWIST CORD

TBR	Brown Cotton Twist
TBK	Black Cotton Twist
TPT	Putty Cotton Twist

B - WIRE CAGE

NA	No/No Wire Cage
WC	Brass Wire Cage

DIMENSIONAL DRAWING

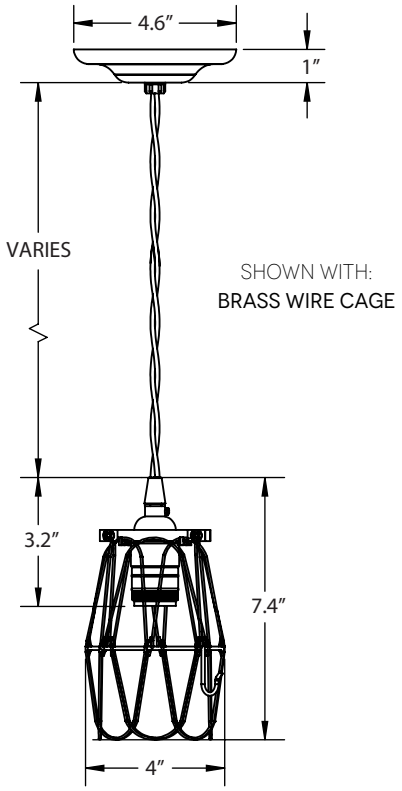

IMPORTANT:

LIGHT SOURCE

All published luminaire photometric testing is performed to IESNA LM-79-08 standards by a NVLAP accredited laboratory. Data is considered to be representative of the configurations shown, within the tolerances allowed by Lighting Facts. To obtain an IES file specific to your project, please contact our manufacturing facility or a sales representative.

OPTION	WATTAGE	CRI	VOLTAGE	DIMMING
INCANDESCENT (MED E26)				
E26	60W Max	100	120 VAC	Bulb Dependent

SPECIFICATIONS

DESIGN & FINISH

POLISHED BRASS CANOPY

Complete with 5′ of Cotton Twist Cord, +/- For Socket Orientation

CERTIFICATIONS, LISTINGS & WARRANTY

MADE IN THE USA

Manufactured and Hand-Crafted in Our 60,000 Square Foot Facility Located in Titusville, FL

CSA LISTED FOR DRY LOCATIONS

LIMITED WARRANTY

For Additional Information on Our Limited Warranty, Please See Our Terms & Conditions