SPS-0281 REV A

ENAMELWARE COFFEE MUG – 8OZ

JOB NAME: _____ FIXTURE TYPE: _____

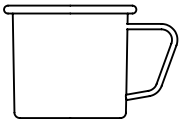

BLE - CUP - COF - _____ - _____

A B

Order Example: BLE - CUP - COF - 850 - 250

A - EXTERIOR FINISH

PORCELAIN FINISHES[1,2]:

150	Black
250	White
350	Vintage Green
355	Jadite
650	Bronze
750	Cobalt Blue
765	Delphite Blue
850	Graphite

PORCELAIN GRANITEWARE FINISHES[1,2]:

160	Black with White Speckles
365	Jadite with Black Speckles
760	Cobalt Blue with White Speckles
766	Delphite with White Speckles
860	Graphite with White Speckles

B - INTERIOR FINISH

PORCELAIN FINISHES[1,2]:

150	Black
250	White
350	Vintage Green
355	Jadite
650	Bronze
750	Cobalt Blue
765	Delphite Blue
850	Graphite

IMPORTANT: *(1) Due to the handcrafted process of applying a porcelain finish, some irregularities and blemishes are common and contribute to the uniqueness of each cup. Please be mindful that no two cups will be exactly alike. (2) There are no returns accepted on this product*

DIMENSIONAL DRAWINGS

SIDE VIEW

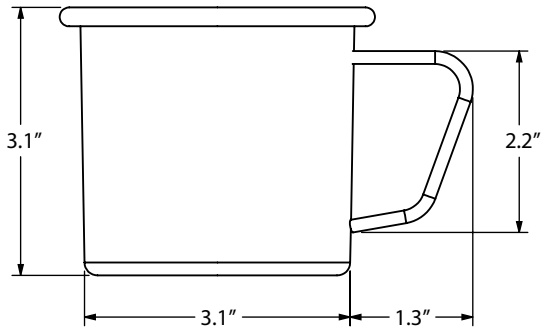

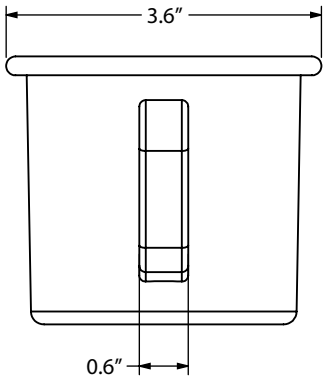

SPECIFICATIONS

CERTIFICATIONS & WARRANTY

MADE IN THE USA
Manufactured and Hand-Crafted in Our 60,000 Square Foot Facility Located in Titusville, FL

MADE TO ORDER
All Dinnerware Is Specifically Made According to a Customer's Specifications and No Two Pieces Are Alike

DISHWASHER SAFE
While Dishwasher Safe, Barn Light Recommends Avoiding Harsh Detergents and Crowding in the Dishwasher

OVEN SAFE
All Dinnerware Is Oven Safe up to 450° F/232° C

CERTIFICATIONS & WARRANTY (CONTINUED)

PASSING RESULTS FOR THE FOLLOWING THIRD PARTY TESTS
US FDA CPG 545.450 and CPG 545.400 Extractable Lead and Cadmium. California Proposition 65, Tableware and Safety Program, Leachable Lead and Cadmium. FDA 21 CFR 175.300, Resinous and Polymeric Coatings.

DESIGN & FINISHES

CONSTRUCTION
Hand-Spun from 20 Gauge Sheet Metal Therefore Not Suitable for Microwave Use

PORCELAIN FINISHES
Applied by Hand and Fired in a High Temperature Oven