SPS-0328 REV B

BOMBER QUICK SHIP GOOSENECK LIGHT

JOB NAME: _____ FIXTURE TYPE: _____

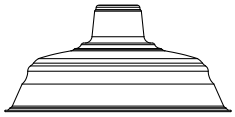

BLE - G - QS - _____ - _____ - _____ - _____

A B C D

Order Example: BLE - G - QS - WHB17 - 600 - G22 - WC

A - SHADE SIZE	B - FINISHES	C - GOOSENECK ARMS	D - SHADE ACCESSORY
BOMBER:	*POWDER COAT FINISHES[1]:*	*GOOSENECK OPTIONS:*	
WHB13 13" Shade	**100** Black	**G3[2]**	**NA** None/No Wire Cage
WHB17 17" Shade	**200** White	**G14**	**WC** Wire Cage[2]
	600 Bronze	**G15**	
	975 Galvanized	**G22**	

IMPORTANT: *(1) All Powder Coat finished shades, Galvanized excluded, feature a white interior (2) Not compatible with 17" shade size (3) If selected, shade accessory finish will match selection in Section B*

MOUNTING DIMENSIONS

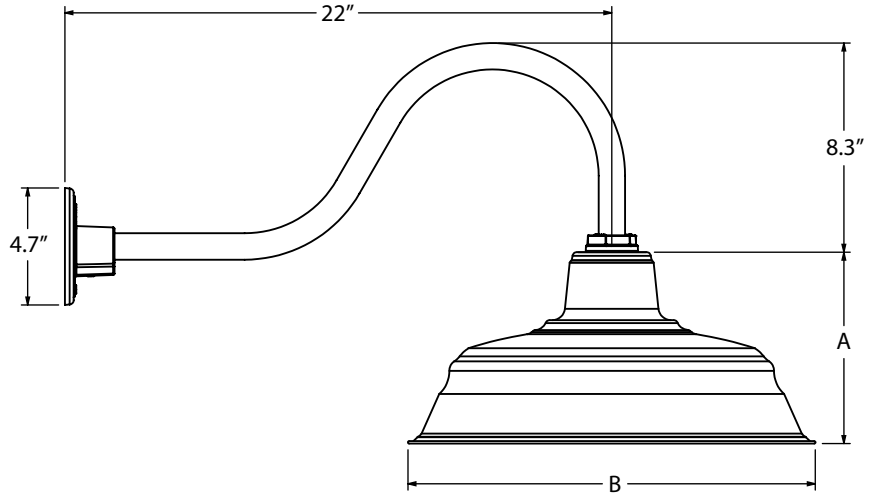

SHOWN WITH:
13" SHADE & G22 GOOSENECK ARM

SHADE CODE	HEIGHT (A)	DIAMETER (B)
WHB13	6"	13"
WHB17	8.25"	17"

SPECIFICATIONS

CERTIFICATIONS, LISTINGS & WARRANTY

MADE IN THE USA
Manufactured and Hand-Crafted in Our 60,000 Square Foot Facility Located in Titusville, FL

CSA LISTED FOR WET LOCATIONS

LIMITED WARRANTY
For Additional Information on Our Limited Warranty, Please See Our Terms & Conditions

CONSTRUCTION & FINISH

POWDER COAT SHADE
Hand-Spun from High Purity 3003-O Temper Aluminum

GALVANIZED SHADE
Hand Spun from High Quality Galvanized Steel

CONSTRUCTION & FINISH (CONTINUED)

POWDER COAT FINISHES
Polyester Powder Coat Finishes Are Electro-Statically Applied and Thermocured

GOOSENECK
1/2" Nominal (0.84" Actual) or 3/4" Nominal (1.05" Actual) Sch 40, 6063 Aluminum Gooseneck

LIGHT SOURCE

INCANDESCENT
Medium Base E26 Socket, 120 VAC, 200W Max